Movibloc

Mobile shelving

MECALUX

Mobile Shelving System

Movibloc is a compact archive storage system comprising of shelving or lockers mounted on mobile bases which slide along rails. This means that all but one of the aisles between the shelving units are eliminated and the modules are moved to access the required aisle.

This system optimises available space, guaranteeing that archived material is kept in order, clean and safe.

Multiply Available Space

Movibloc is a compact storage system, therefore storage space can be doubled, or the amount of space required reduced.

It is ideal for the storage of all kinds of books and documents, making it a perfect system for offices, libraries, publishing houses, technical archives, and many other places. It can also be used to store other types of small articles, such as pharmaceutical products or spare parts.

Adapts to All Requirements

Mobile lockers adapt completely to the available space and to the characteristics of the product being stored. The Mecalux Technical department will assist in providing you with the best solution for your needs, thus creating a custom built system in all aspects for your product range.

Major Advantages

- **It saves on spaces,** as it is a compact system.

- **Order:** the different available accessories enable articles to be perfectly classified when archived or stored.

- **Cleanness:** as there are no aisles, the shelving units form a closed block, reducing the amount of dust entering.

- **Efficiency:** required space is reduced and material is easily classified.

- **Security:** the security lock for the lockers guarantees that access is restricted to authorised personnel.

- **Versatility:** accessories, shelf levels at 25-mm intervals and a variety of sizes mean the shelving can be adapted to meet all types of requirements.

- **Aesthetics:** mobile shelving can blend in with any working environment thanks to the materials used, the quality finishing and the highly resistant soft-toned paints applied to the metal components.

- **Strength:** the installation is made of components designed to ensure its overall strength.

- **Minimum effort:** the design of the wheel or three-armed handle ensures more ergonomic shelf movement. The carefully designed gearing system ensures that no more than 5 kg need be applied to the crank wheel to move a Movibloc locker.

- **Easy to assemble:** its fully modular construction makes the system easy to handle and assemble.

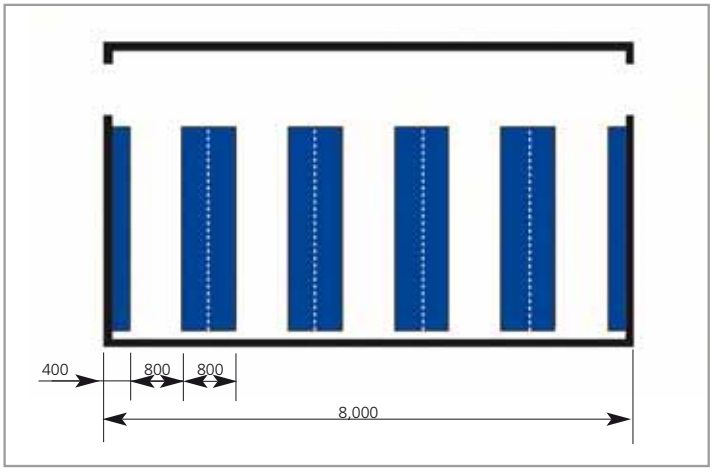

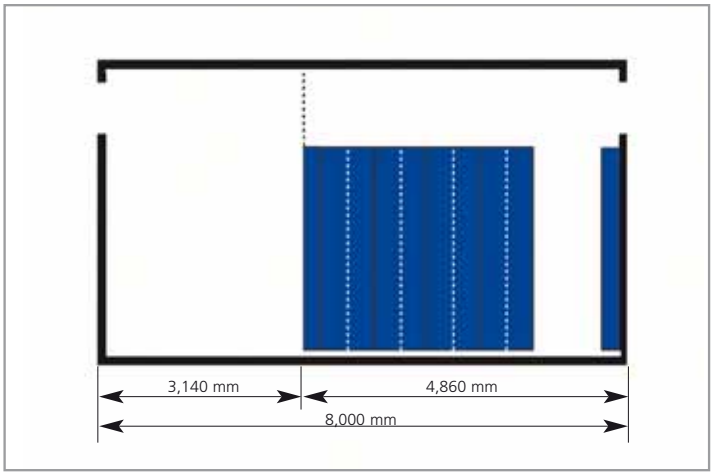

Reservado
para
Archivo Central

Operation Mechanism

Mechanical Manual

Movement in the required direction is transmitted to the drive wheels by a practical crank wheel and the sets of cogwheels and chains. This means the lockers can be moved with a minimum of effort.

Manual

The lockers are moved using handles on the side of each locker. This is an effective system for archives containing lightweight material.

Electrical

On pressing the manoeuvring switch, the lockers slide smoothly and automatically, leaving the chosen aisle open. The traction system consists of a motor linked to the gear and transmission assemblies in the bases.

Applications

Movibloc lockers can be used for a wide range of applications, such as spare parts storage, bookshops or pharmacies, as well as the more usual application of document archives.

It is the ideal storage system when capacity and space need to be optimised. The returns on investment are immediate.

Office filing systems.

Hanging document files.

Artwork classification.

Pharmaceutical products.

Golf kit storage lockers.

Clinical history archive.

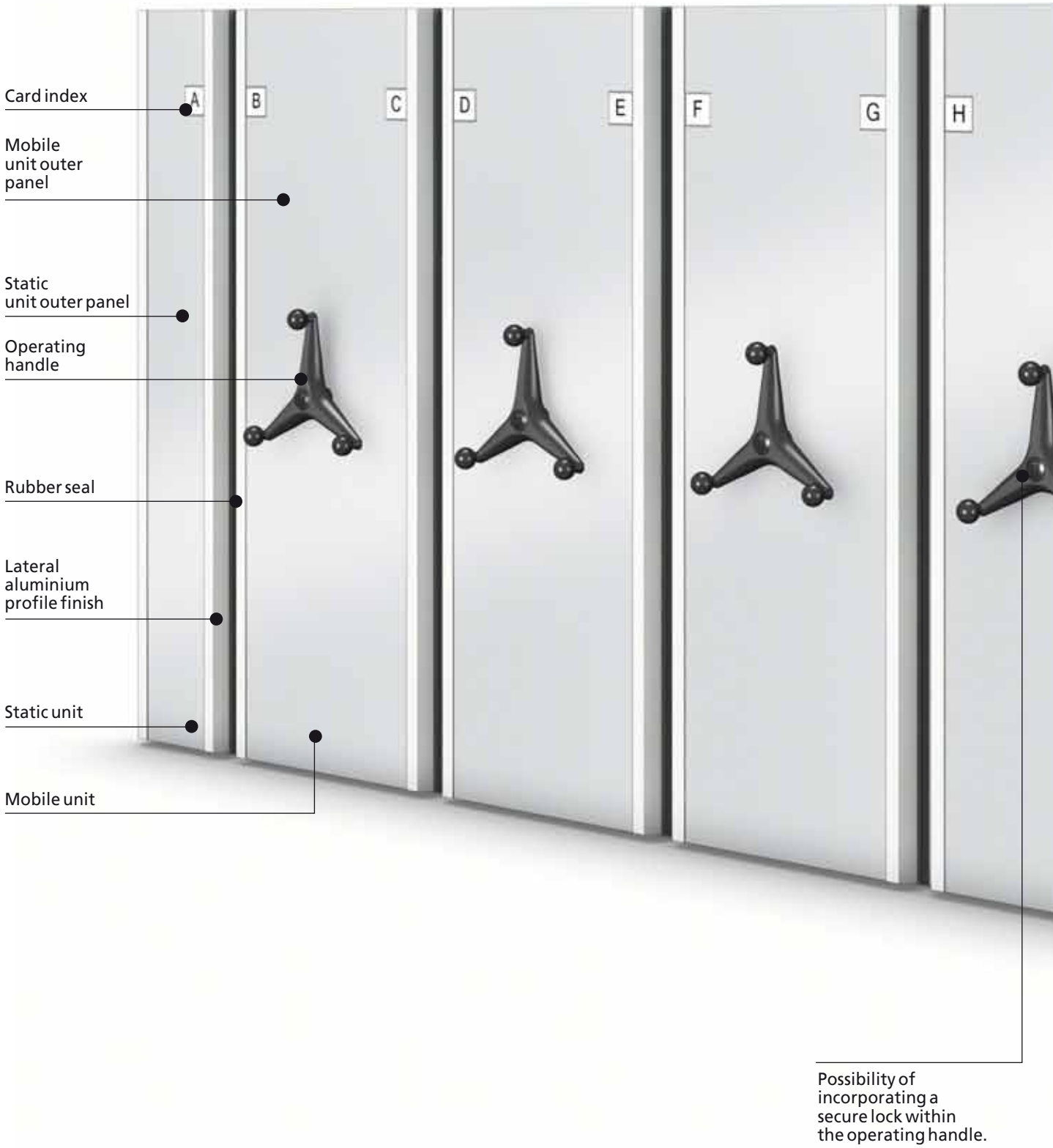
Card index
Mobile unit outer panel
Static unit outer panel
Operating handle
Rubber seal
Lateral aluminium profile finish
Static unit
Mobile unit
A
B
C
D
E
F
G
H
Possibility of incorporating a secure lock within the operating handle.

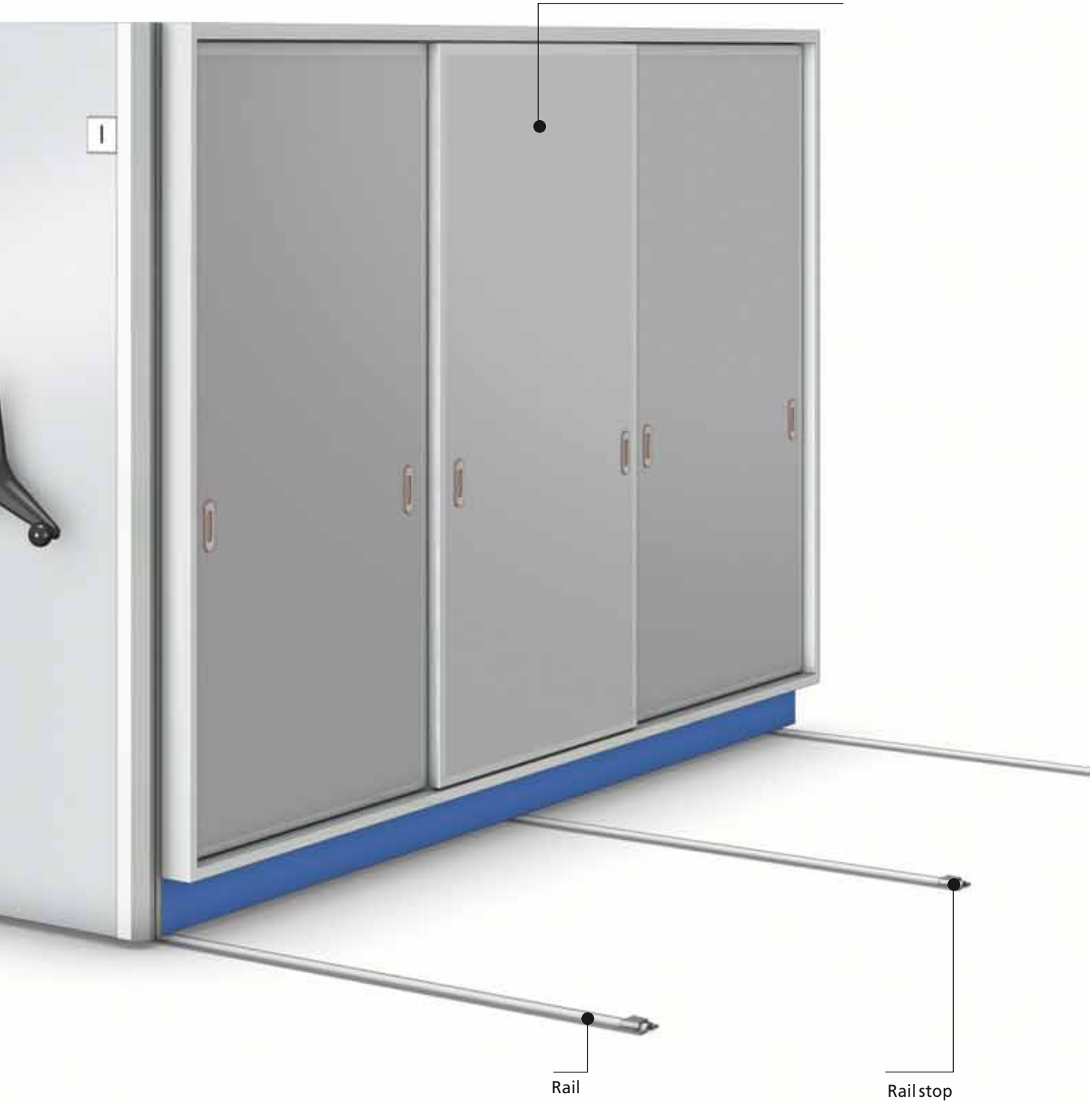
Bays with sliding doors.
Given the versatility
of the system, bays may be fitted
with sliding doors.
Rail
Rail stop

A Filing System with Significant Advantages

Rubber stop

Shelves for incorporating hanging files. With your perfectly classified, at-a-glance archive, documents can be easily retrieved.

Bookends are ideal for sorting books or publications.

Cross-bracing set

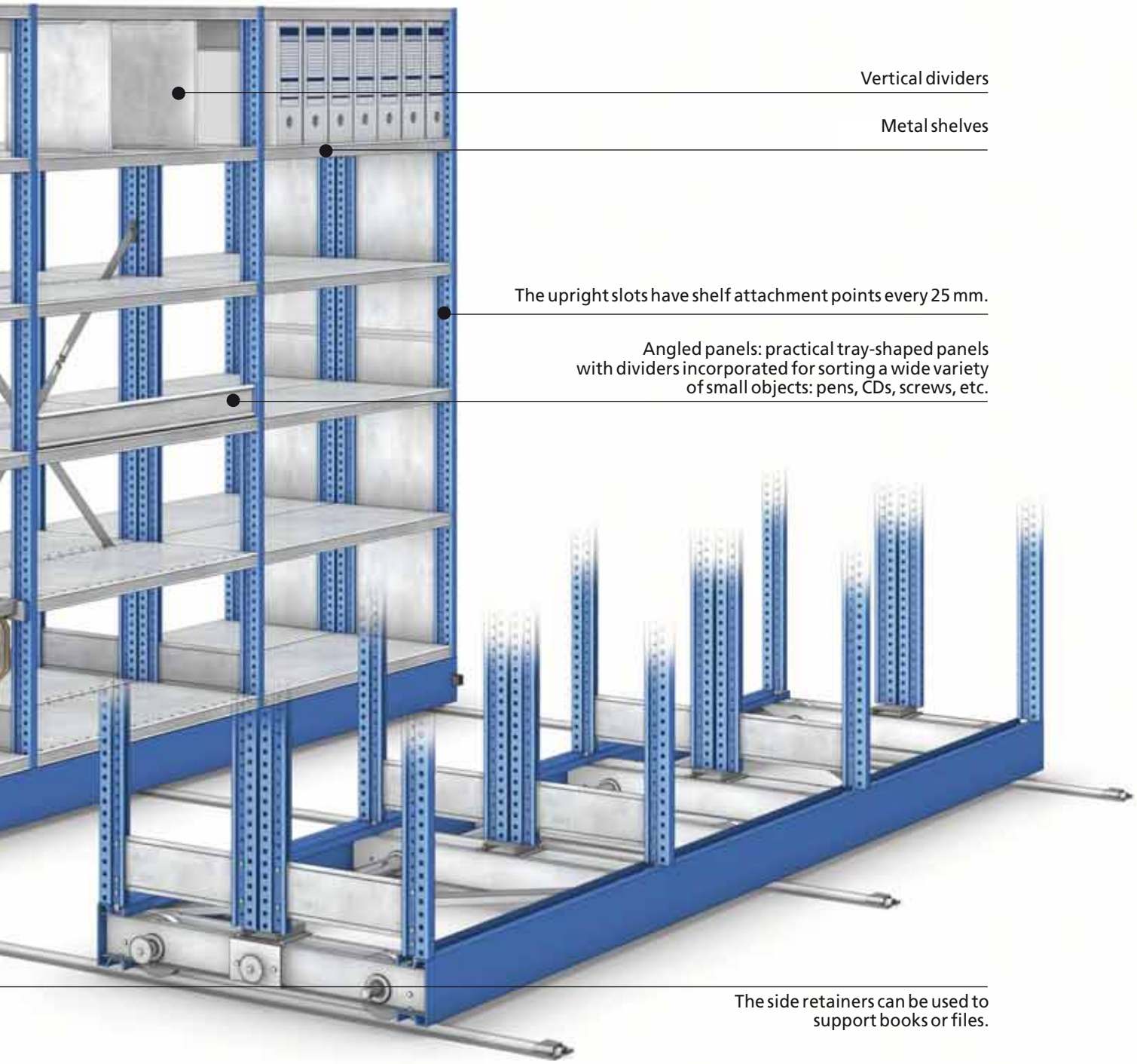

Vertical dividers

Metal shelves

The upright slots have shelf attachment points every 25 mm.

Angled panels: practical tray-shaped panels with dividers incorporated for sorting a wide variety of small objects: pens, CDs, screws, etc.

The side retainers can be used to support books or files.

Different Types of Bays

The Mecalux M3 shelving components will initially provide the basis for numerous bays configurations enabling to meet different requirements in terms of the product to be filed or stored, the weight and their classification.

Various accessories of M3 shelving can be utilised such as:

- Vertical dividers
- Book dividers
- Lateral retainers
- Front retainer
- Garment rail set
- Suspension file set
- etc.

Suspension File Set

Optimum component for fitting hanging files without the use of a shelf.

These are designed to accommodate different types and sizes of files.

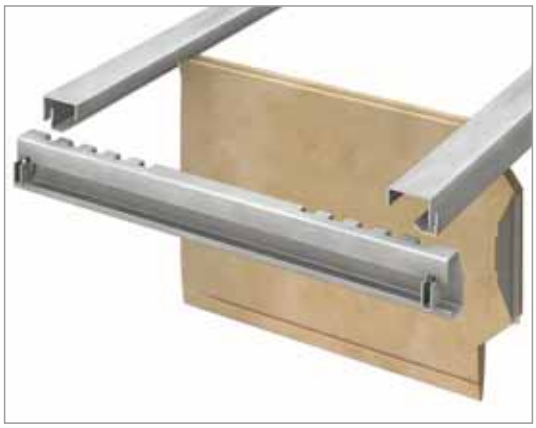

Wheels and Rails

The quality of the materials and manufacturing process for the operating system, wheels, transmission shafts and other parts, guarantee the smooth movement and perfect guidance of the mobile shelving system.

Wheels

The wheels are mounted on self-lubricating bearings, with a large radial capacity. These travel along our specially manufactured rails, with a carefully designed profile for perfect movement.

Rails

The rails are omega-shaped with a low profile and are designed for attaching directly to a correctly levelled floor. No special building work or flooring is required. This is the most common system of installation.

Components

1) Guide rail
2) Wheel
3) Wheel and transmission shaft
4) Bearing housing
5) Self-lubricated ball bearing
6) Profile support base

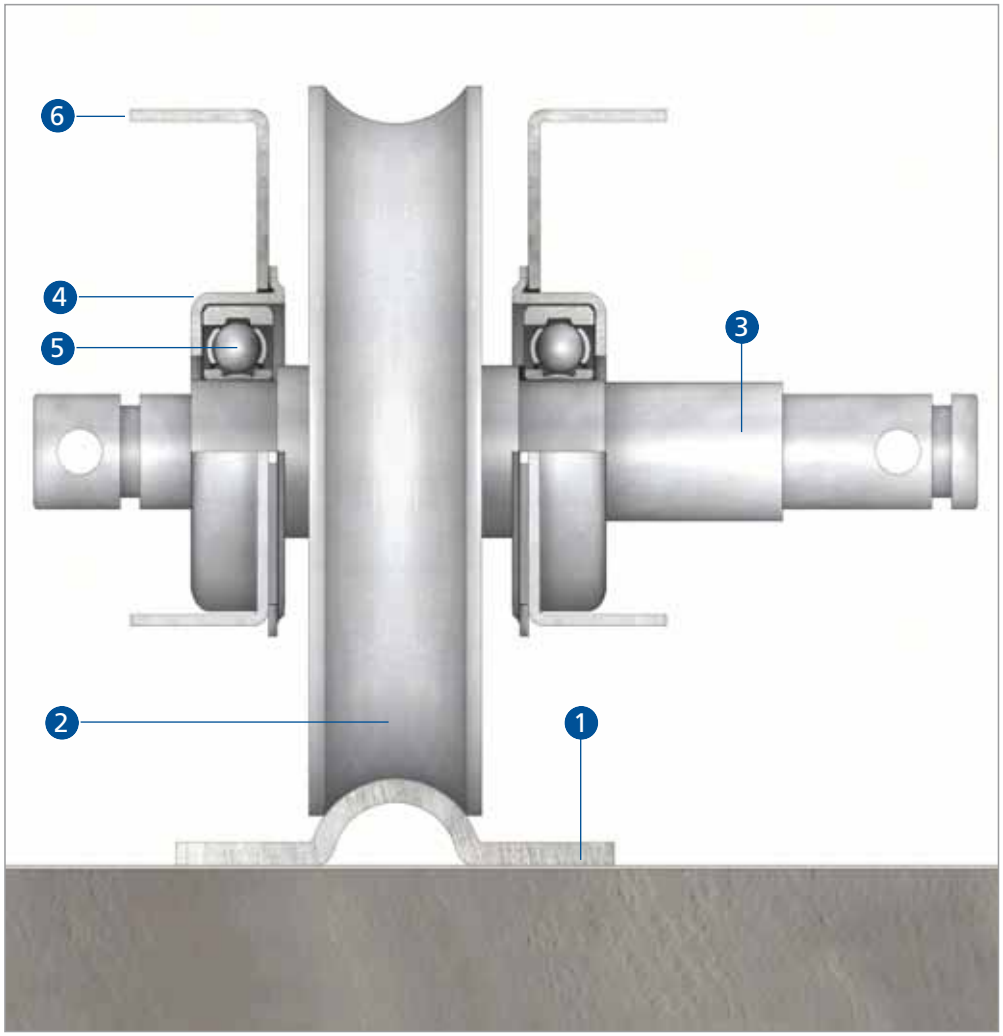

Using Floorboards

The rails can be embedded in wooden boards placed on top of the existing floor, if the type of floor demands it of if it is requested by the client.

In such cases, the beams and supports to which the rails are fixed must initially be levelled.

The board bases, usually made of wood with a non-slip finish, fit in between the beams and are raised to the same level as the top of the rail. A wide variety of accessories provide the required finish.

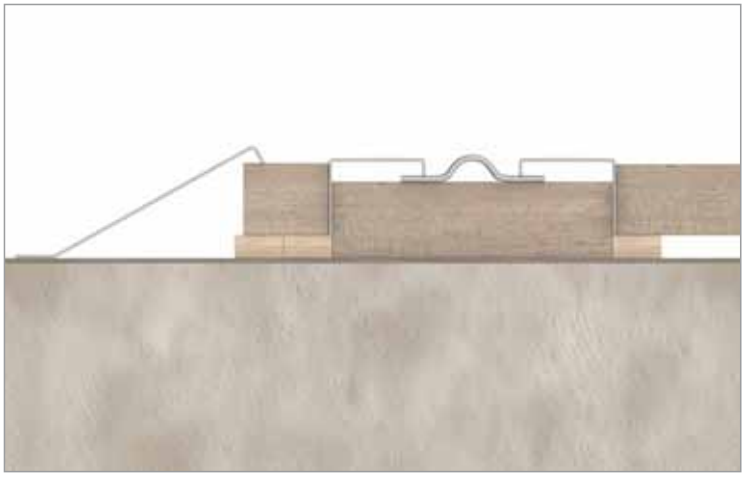

When delicate floors needing protection are suitably levelled, then the ideal solution is to fit the boards directly onto the floor, with the rails running on top of them rather than being embedded, thereby distributing the load over a wider surface area.

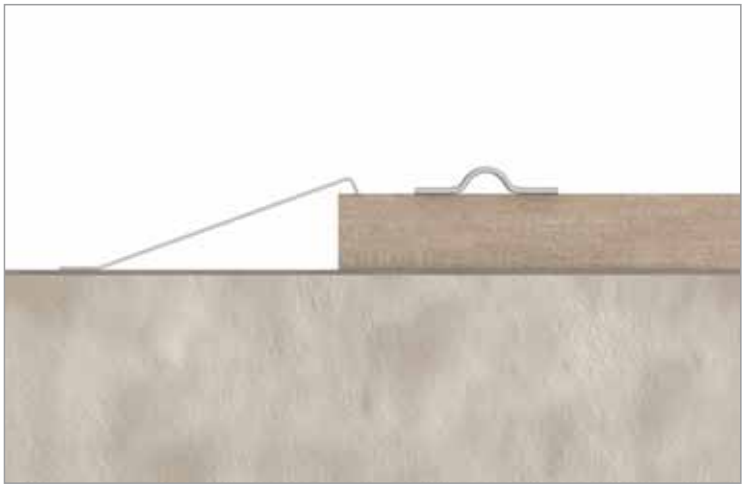

Embedded Rails

This solution is carried out in installations where the rails cannot be used on the surface or floorboards.

The rails are housed to the U-shaped profile which is anchored and embedded in the floor. The profile has previously been levelled to the concrete mould.

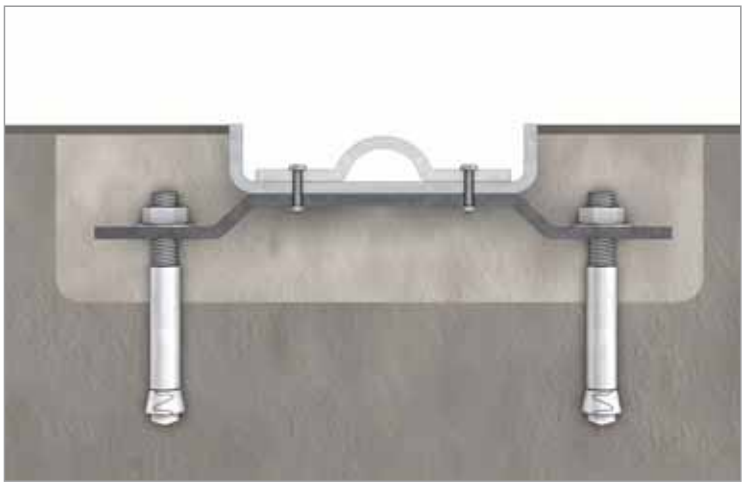

Accessories

Sliding Doors

Sliding doors for protecting the documents or files inside can be fitted to the front of fixed or mobile shelf units.

The doors include a lock to prevent access by non-authorised personnel.

Card Index

These enable the content of each shelf unit to be identified from outside.

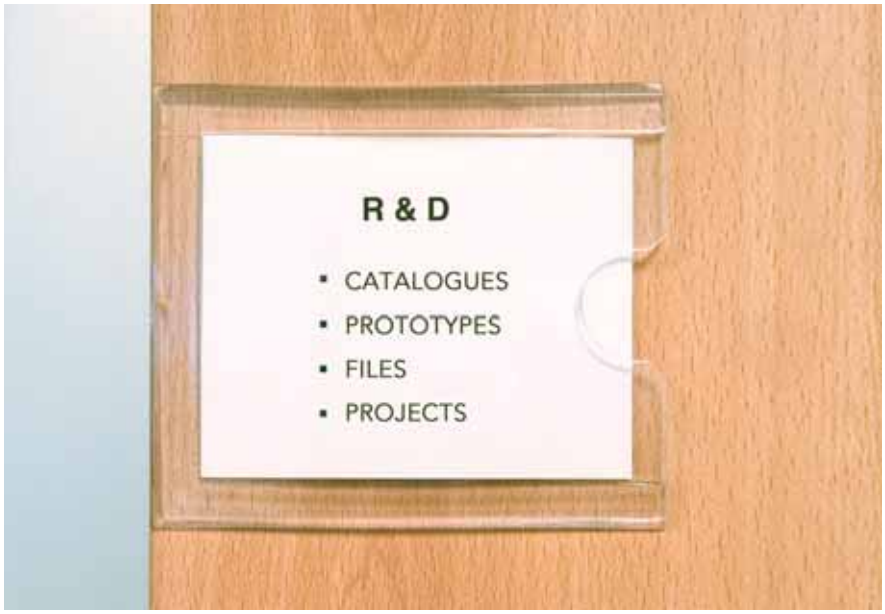

Locking System

Lock within the operating handle

The operating handle is designed to incorporate a locking device to prevent access by non-authorised personnel.

Lateral lock

It has the same function as the lock in the operating handle. This solution is installed when the shelving units are manually operated by handles.

Secured doors

This blocks the lateral movement avoiding access to the enclosure.

Operating System Characteristics

MECHANICAL MANUAL

The movement is transmitted from the crank wheel to the wheels through a system of cogwheels and an axle, connected by transmission chains.

The number of cogwheels, their size and layout multiply the force exerted. The load stored on each shelf should be considered when calculating the number of cogwheels required to minimise the force needed to move the shelf units.

The movement speed is smoother the greater the number of cogwheels used.

Double Gearing System

This is the most common system, as it uses two pairs of cogwheels, enabling a locker loaded with 5,500 kg to be moved by applying a force of just 4.84 kg to the crank wheel.

For example, if the locker contains a load of 2,500 kg, then a force of 2.2 kg is required to move it.

Triple Gearing System

A gear assembly is added to the above solution, enabling 5,500 kg to be moved with a force of 2.09 kg and 12,500 kg to be moved with 4.75 kg.

Double Gearing System

Triple Gearing System

Operating Handle

Manufactured in plastic material with a slender design, this is the component upon which the force is applied to move the bases.

The ergonomic shape of a three-arm star shape enables different personnel to choose the optimal end upon which the force will be applied.

In the centre of the operating handle there is a blocking device composed by a pressure bristle that avoids the accidental movement of the units when somebody is within the aisle. This pressure bristle permits the fitting of a lock that blocks all the installation and avoids the access to non-authorised personnel.

Un-secured operating handle

Secured operating handle

Operating handle with secure lock

ELECTRICAL OPERATION

An electric motor and operating circuit for the control panel are installed in each base.

The system has two operating modes:

Automatic

This is the normal operating mode, using all possible functions and safety procedures.

Upon pressing the "On" button to access the required aisle, the bases move in cascade to open the aisle.

Once the aisle is opened, the system locks automatically as the user enters, preventing the shelf units from moving while the user is inside. The system only becomes operational again when the user presses the reset button.

Each button panel has a series of coloured indicator lights showing the status of each base.

Manual

This is normally used for maintenance procedures. It enables the bases to be moved slowly while pressing the "On" button.

Safety

The following devices allow users to work safely inside the installation:

- A photoelectric barrier which covers the entrances to the aisles. If the light beam is interrupted, the whole system locks up.
  If the movement of a base is mechanically blocked, the whole system stops after a specific period of time, and will not start up again until reset.
- There is also an emergency button on each Movibloc locker.

Types of Motor

There are two types of motor to choose from, depending on the anticipated weight of material to be stored in each mobile shelving unit.

Motor for Light Loads
A small motor, which can be mounted in the space for the crank wheel in manual mechanical operating systems, and which uses the same gear sets and transmission chains.

This means that a mechanical manual system can be converted into an electrical operating system.

Motor for Heavy Loads
When bases with heavy loads need to be moved, a gear-motor is installed in each base which acts directly on the transmission axle.

Both types of motor ensure evenly smooth movement and maximum safety.

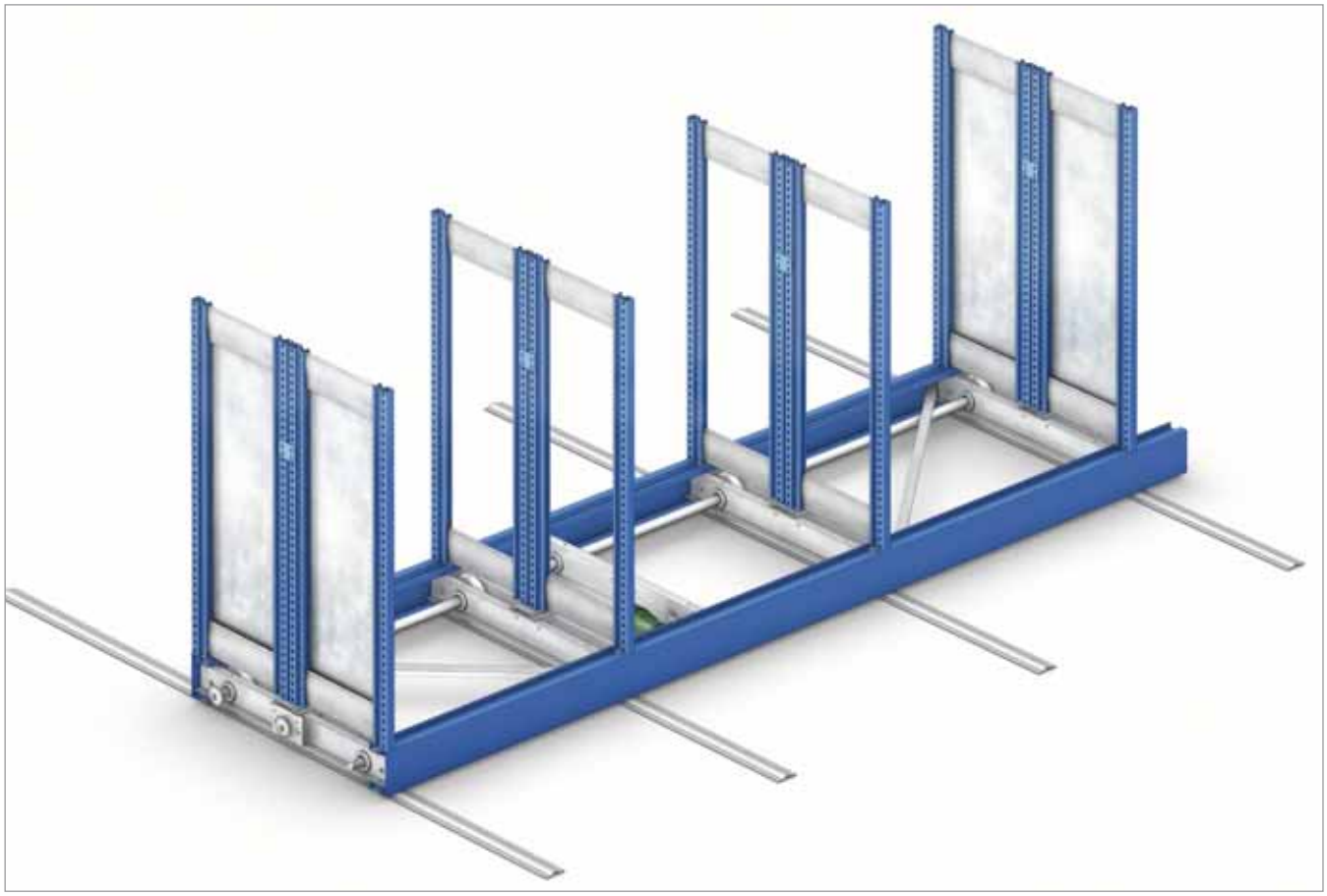

Outer Finishing

The locker sides are normally covered with metal or wooden panels, giving them an attractive finish that blends in with the workspace.

Sliding doors, locks, rubber protectors and index cards are also available.

Grey Melamine Wood

The most frequently used solution is to fit grey melamine panels to the outer sides, inserted between two vertical rounded aluminium sections with overlapping rubber strips that close the aisle and add elegance to the installation.

The optional doors have the same finish as the sides.

Beech Melamine Wood

This is similar to the previous finish, but in beech, giving a more decorative finish.

Other colours of melamine are also possible in both smooth and imitation wood finish in order to match the work area in which the shelves are installed.

Metal Sides

Another type of finish uses metal panels painted grey.

Product Finished for Warehouses

Mobile shelving in most warehouse environments does not require a great aesthetic finish to the system. In these cases, chainguards are used to protect the transmission mechanisms from accidental access of operators as well as the accumulation of dust.

As it has been conceived for a warehouse, numerous applications of the M3 shelving can be configured to suit each type of business activity enabling to store:

- Parcels
- Hanging garments
- Loose goods
- Components
- Spare parts

The following accessories are available:

- Different types of dividers
- Different types of drawers
- Mesh shelves
- Different types of side and back cladding
- Front retainer
- Reinforcer
- Shelves for medium and heavy loads
- Hanger tubes
- Beams
- Chipboard shelf
- etc.

Various Combinations

This configuration represents one of the various combinations that can be achieved utilising any of the components of the M3 shelving.

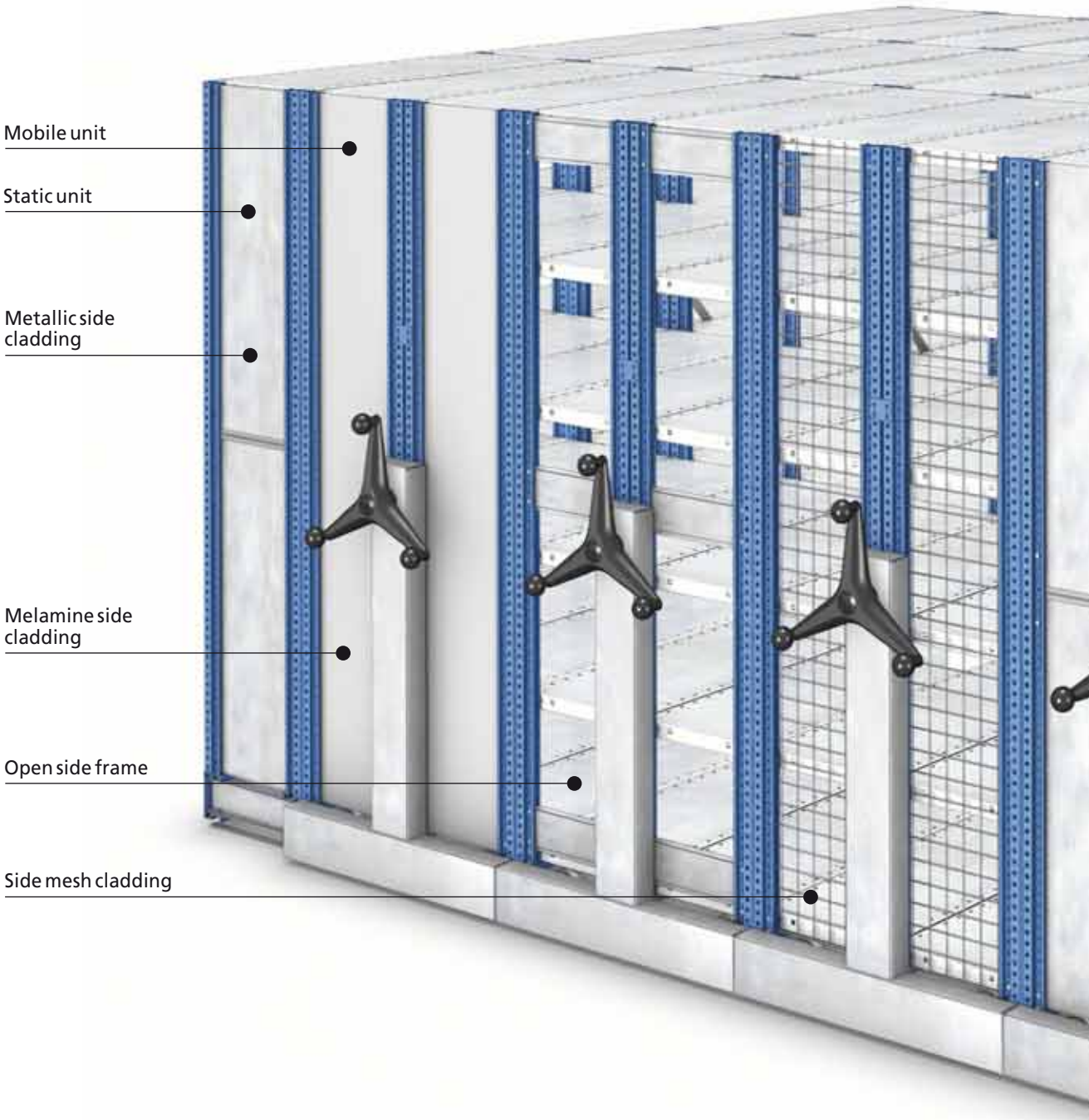

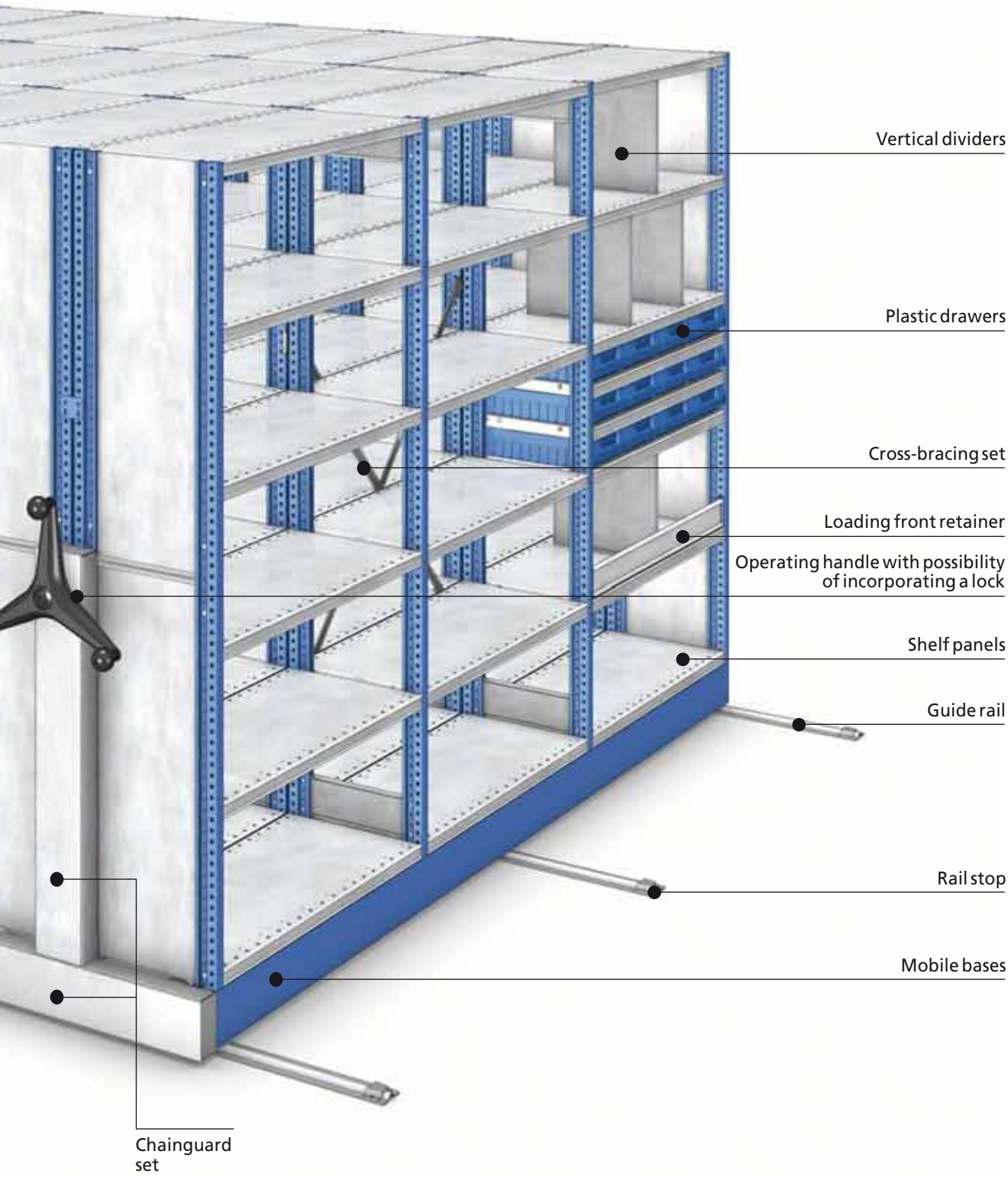
Vertical dividers
Plastic drawers
Cross-bracing set
Loading front retainer
Operating handle with possibility of incorporating a lock
Shelf panels
Guide rail
Rail stop
Mobile bases
Chainguard set

Mobile Shelving for Heavy Loads and Bulky Products

With the same concept, the M7 shelving units are installed upon the mobile bases. The shelving of this range enables the storage of manually handled bulky and or heavy goods.

Numerous combinations are available utilising components and accessories from the M7 range.

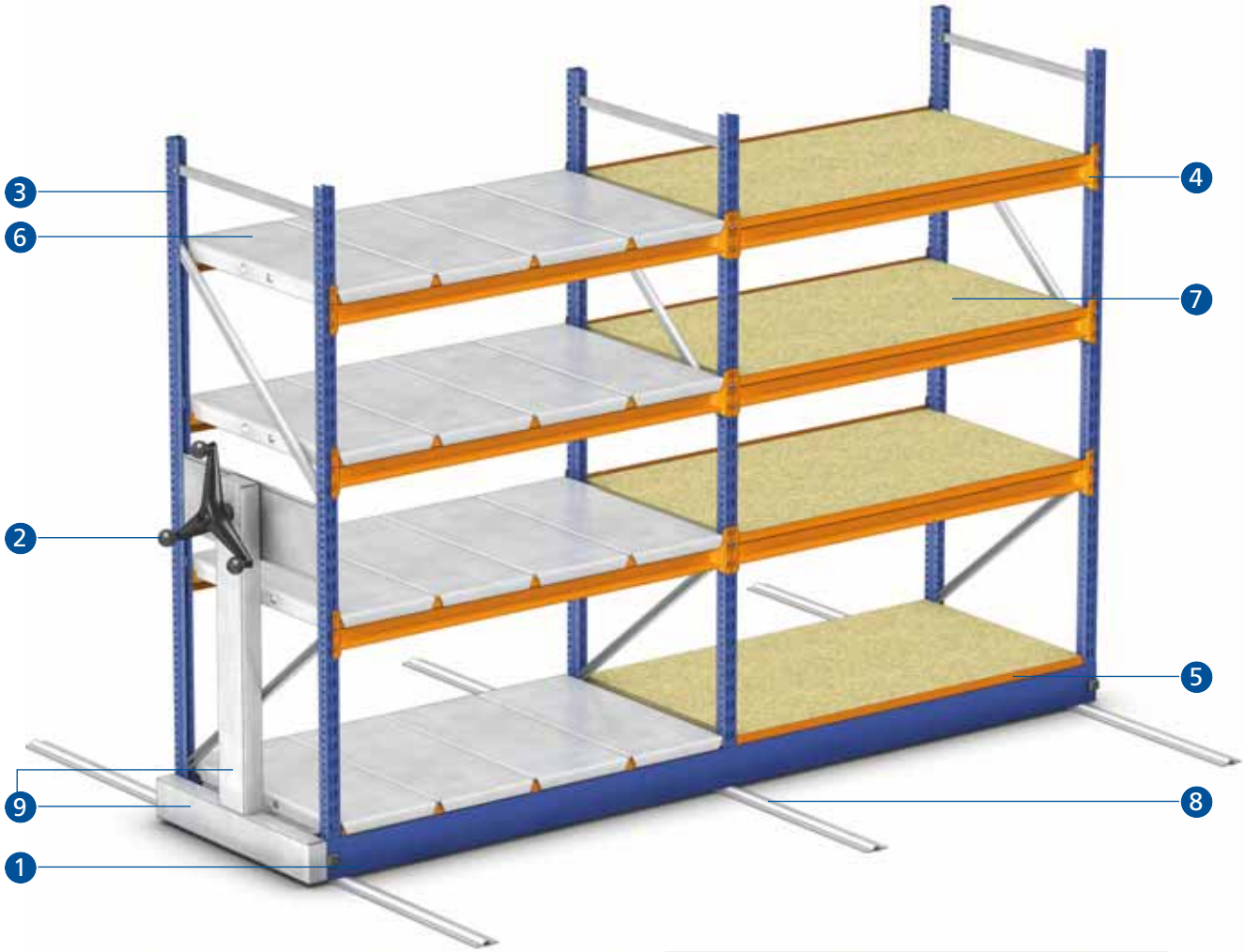

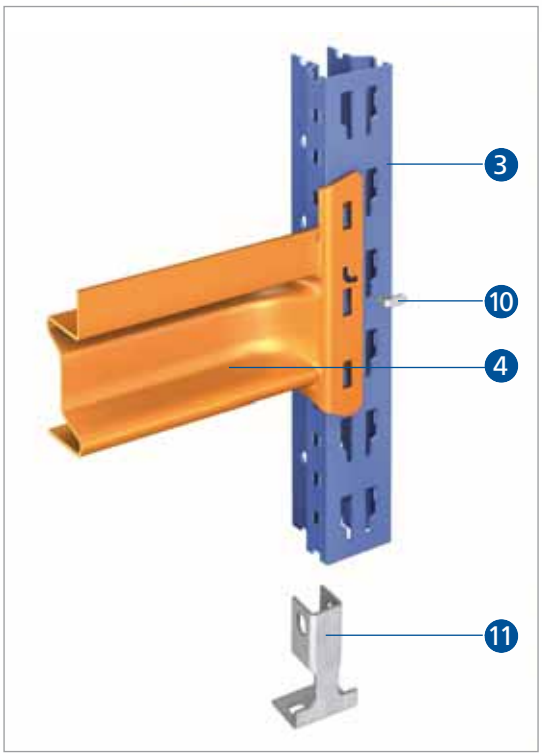

Components

1) Mobile base
2) Operating handle set
3) Frame M7
4) Beam Z
5) Base beam
6) Metal shelf
7) Chipboard shelf
8) Rail
9) Chainguard set
10) Safety pin
11) M7 Footplate

Making the Most of Available Height

This type of installation can be used to make maximum use of height, thereby optimising available space.

When the shelves reach a given height, stability and access can be affected. To avoid this inconvenience in spaces with sufficient height, Movibloc shelves or lockers can be installed that use all available height with walkways fitted half-way up enabling the upper levels to be accessed.

These intermediate access walkways for the top levels consist of a metal floor attached to sets of wheels fitted to the shelves themselves, thus enabling the bases to move freely; there is a free space through which the struts pass for this purpose.

The control and operating systems and the safety devices on both mechanical manual and electrical systems are located on both access levels. The installation can be moved and controlled from either of the two floors.

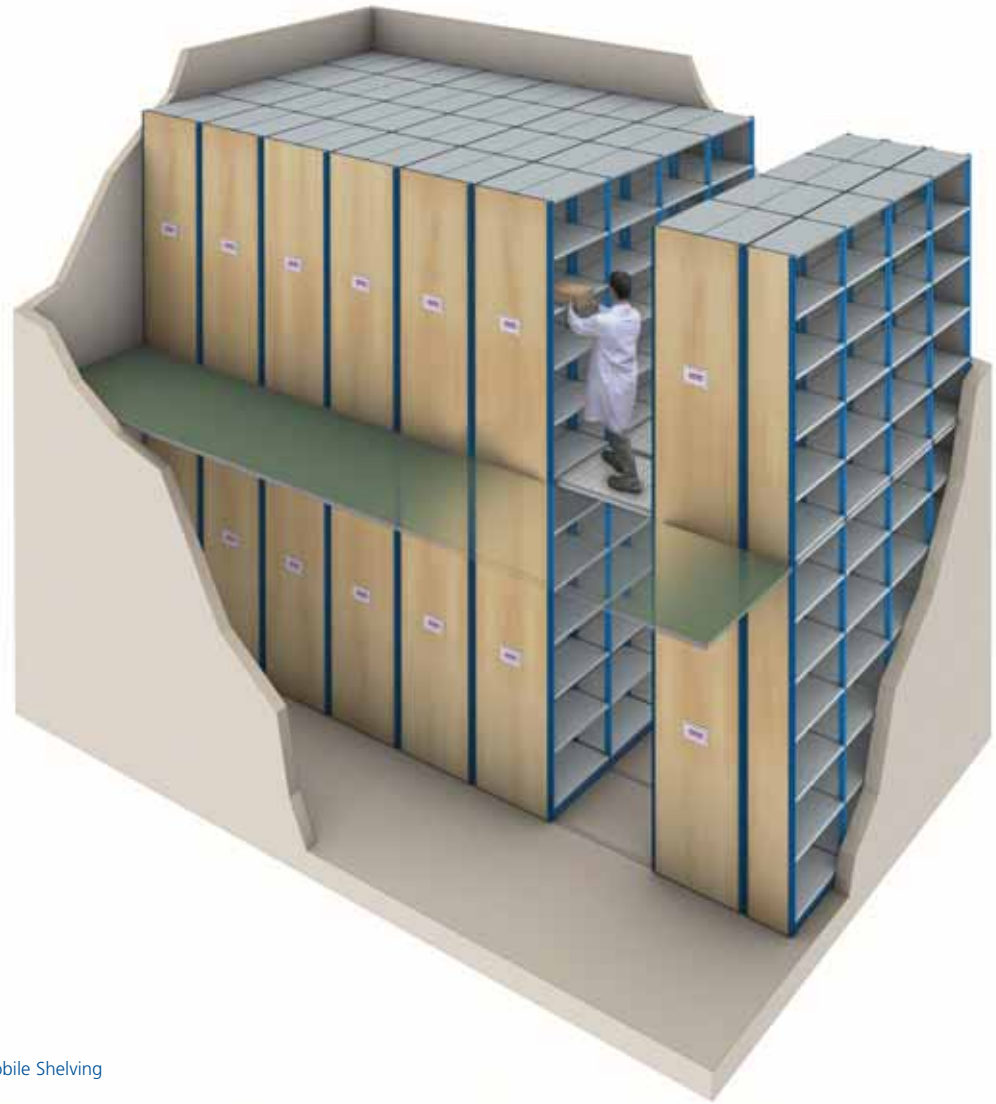

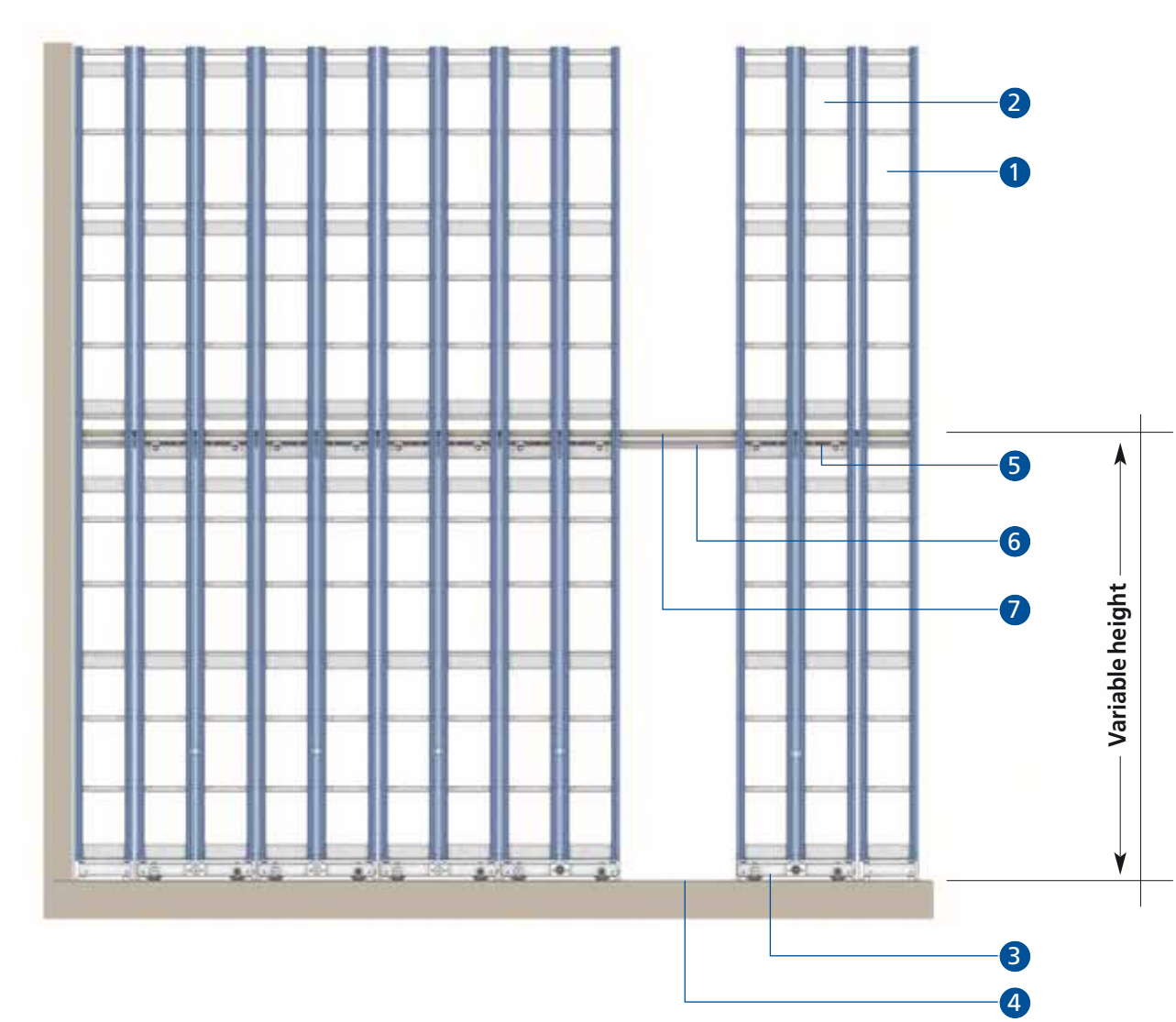

Components

1) Static unit
2) Mobile unit
3) Mobile base
4) Guide rail
5) Sliding gangway set
6) Retractable gangway profile
7) Gangway flooring

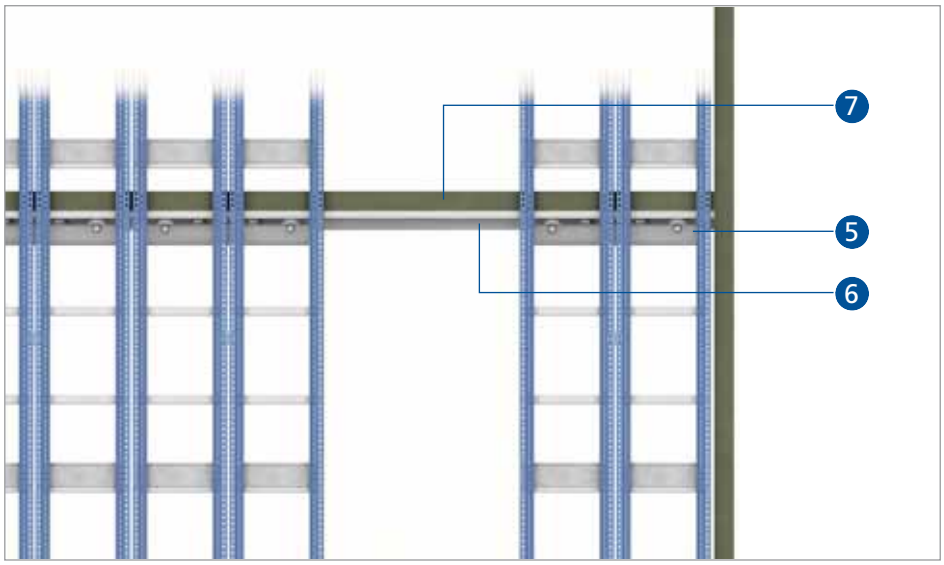

The operating mechanism can be manual or electrically operated.

e-mail: info@mecalux.pl - www.mecalux.pl

ЗАВОД

ГЛИВИЦЕ
tel.: (+48) 32-331 69 66
ul. Wyczółkowskiego 125
44-109 Gliwice
Факс: (+48) 32-331 69 67

КОММЕРЧЕСКИЕ ОТДЕЛЫ

ВАРШАВА
tel.: (+48) 22-654 56 81
Факс: (+48) 32-331 69 67
e-mail: warszawa@mecalux.com

КРАКОВ
tel.: (+48) 12-686 38 70 (71)
Факс: (+48) 12-686 17 89
e-mail: krakow@mecalux.com

ПОЗНАНЬ
tel.: (+48) 61-665 97 87
Факс: (+48) 61-665 97 88
e-mail: poznan@mecalux.com

ВРОЦЛАВ
tel.: (+48) 71-793 88 29
Факс (+48) 71-793 88 31
e-mail: wroclaw@mecalux.com

ГДЫНЯ
tel.: (+48) 58-761 80 80
Факс: (+48) 58-761 80 81
e-mail: gdansk@mecalux.com

Mecalux присудствует в более чем 70 странах мира

Офисы в: АРГЕНТИНА - БЕЛЬГИЯ - БРАЗИЛИЯ - ЧЕХИЯ - ЧИЛИ - ФРАНЦИЯ - ИСПАНИЯ - ГОЛЛАНДИЯ - КАНАДА - КОЛУМБИЯ МЕКСИКА - ГЕРМАНИЯ - ПЕРУ - ПОЛЬША - ПОРТУГАЛИЯ - СЛОВАКИЯ - ТУРЦИЯ - США - ВЕЛИКОБРЫТАНИЯ - ИТАЛИЯ - УРУГВАЙ